FIRST TEAM SPORTS INC.
HUTCHINSON, KS 67501
1-800-649-3688
www.firstteaminc.com
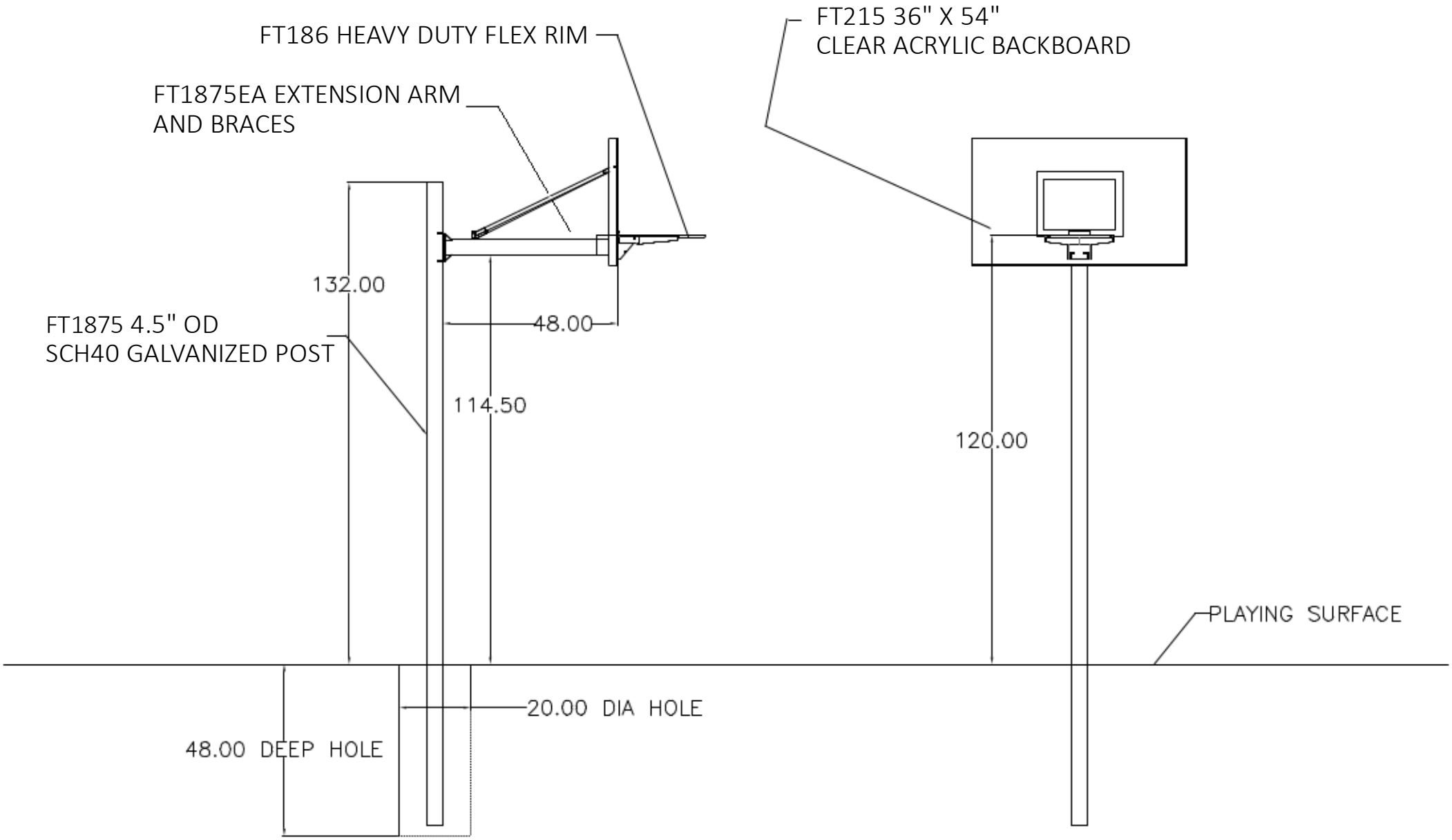
RENEGADE III
PRODUCT SUBMITTAL