FIRST TEAM SPORTS INC.
HUTCHINSON, KS 67501
1-800-649-3688
www.firstteaminc.com

WALLMONSTER INTENSITY
PRODUCT SUBMITTAL
36" OVERHANG INSTALLATION

TOP VIEW

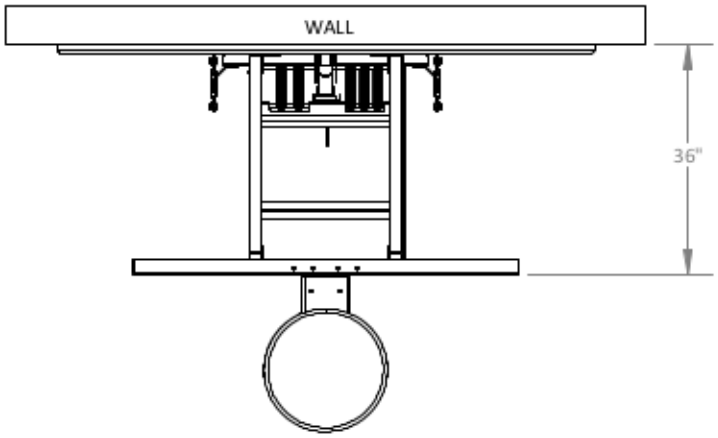

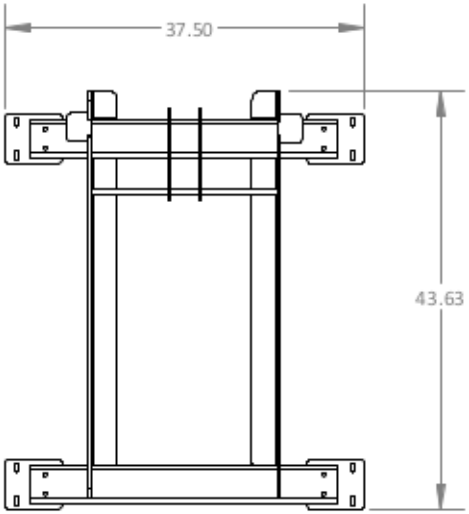

FRONT VIEW

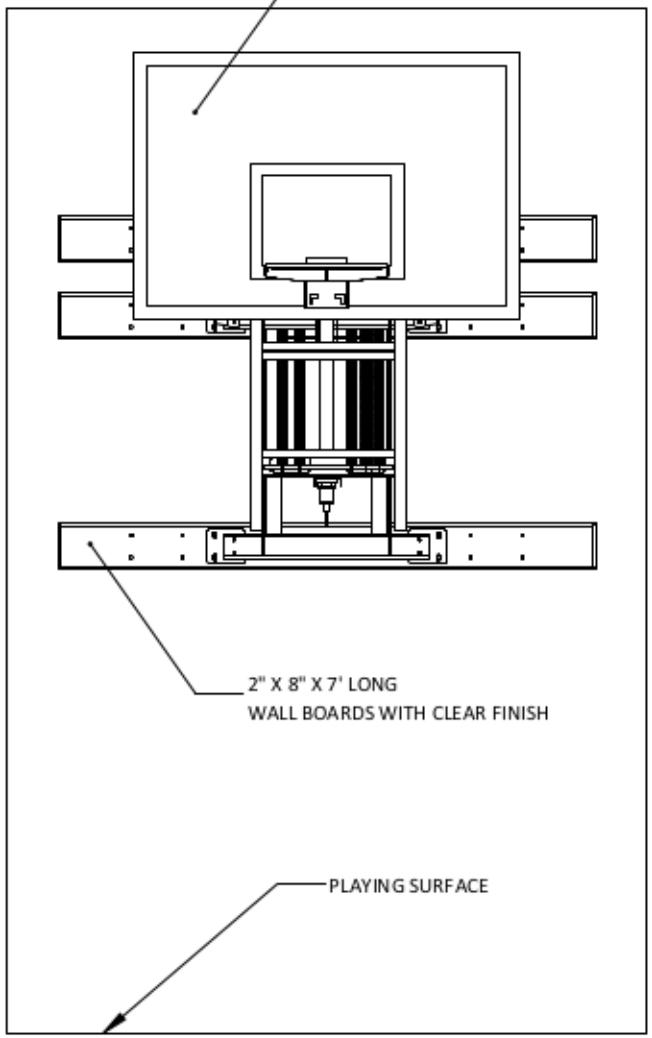
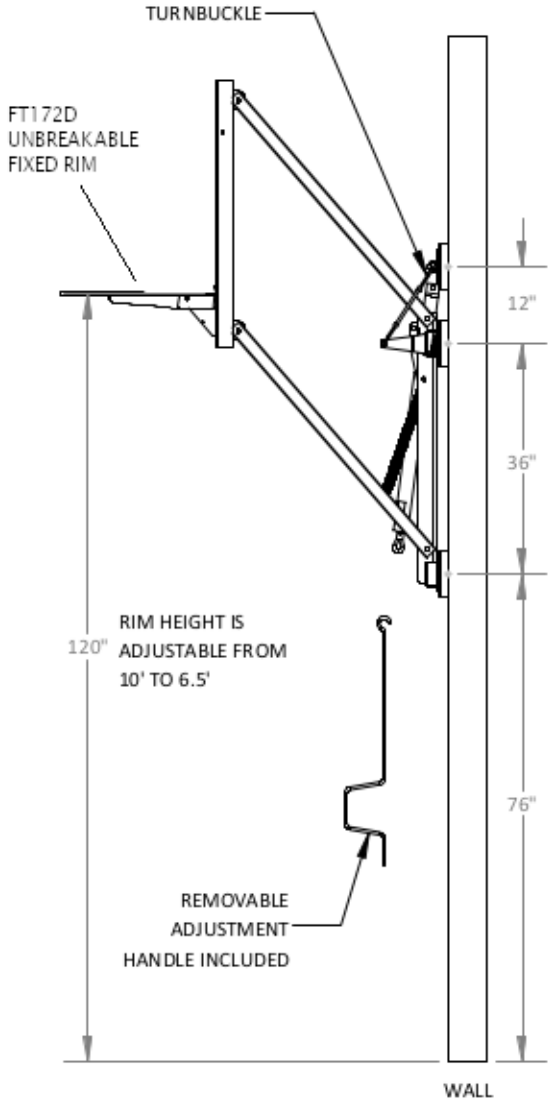
SIDE VIEW